17222835J

CRITERIA 4

Scale 1:10

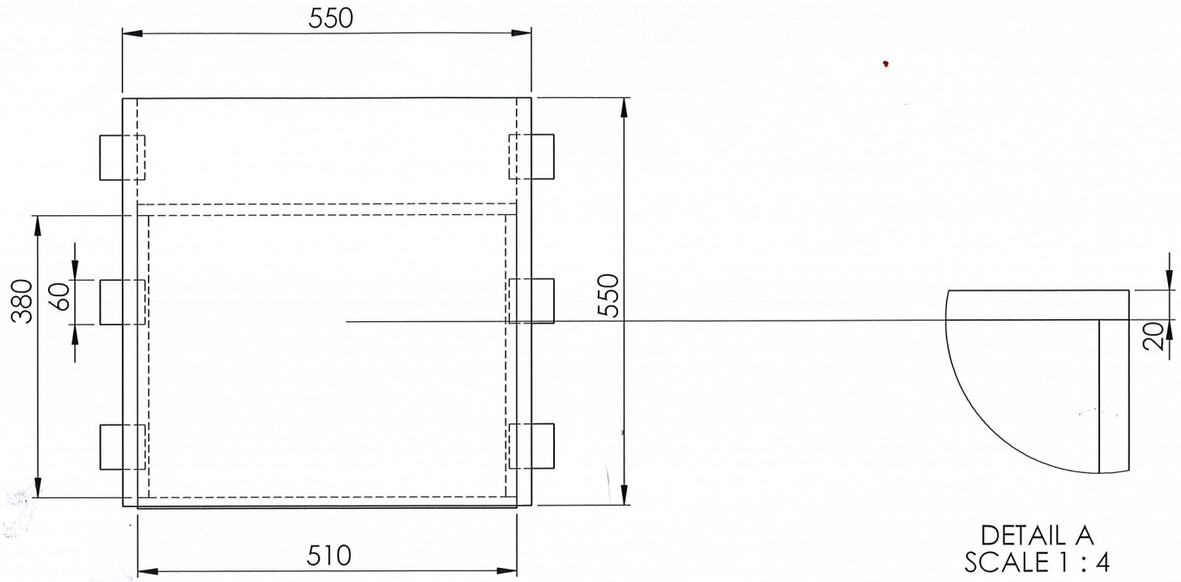

DETAIL A
SCALE 1 : 4

Scale 1:15

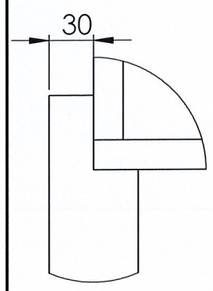

DETAIL B
SCALE 1 : 4

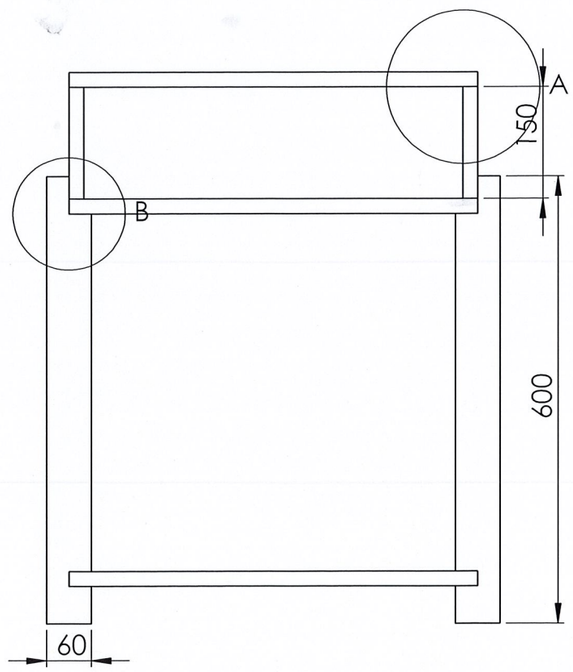

Scale: 1:10

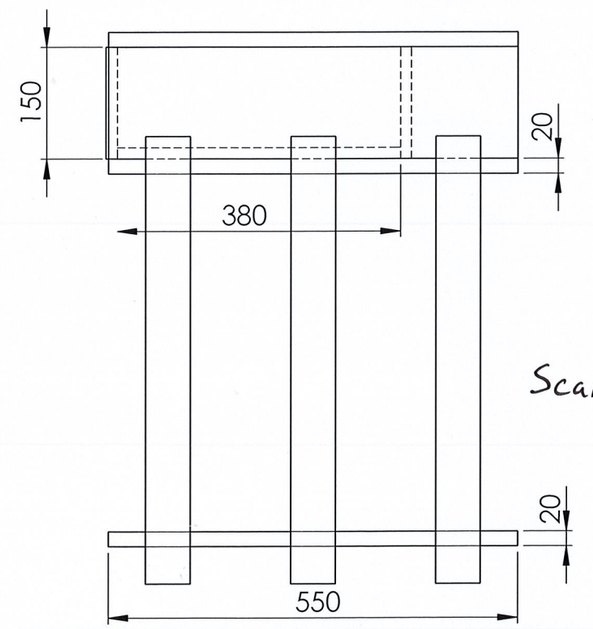

Scale 1:10

UNLESS OTHERWISE SPECIFIED: DIMENSIONS ARE IN MILLIMETERS SURFACE FINISH: TOLERANCES: LINEAR: ANGULAR:	FINISH:			DEBUR AND BREAK SHARP EDGES		DO NOT SCALE DRAWING	REVISION
	NAME	SIGNATURE	DATE			TITLE:	
DRAWN							
CHK'D							
APPV'D							
MFG							
Q.A				MATERIAL:		DWG NO. Working Drawing	A3
				WEIGHT:		SCALE:1:10	SHEET 1 OF 1

Production Plan

Time	Operation Description	Process	Tools Required	Materials Required	Quality Assurance Checks	Safety
30 min	Checking materials	Checking delivered materials to ensure the right quantities and sizes were delivered, and checking quality, marking imperfections	Ruler Order sheet/working drawing Chalk	American Ash Legs x6 Jarrah Planks x17 American Ash Planks x3	Checking for any visible defects, marks or cracks in wood, and marking them	Enclosed leather shoes and apron at all times in workshop
2 hours	Marking Jarrah for domino joints	Measuring and marking where the domino joints need to be cut on the Jarrah planks	Ruler Pencil	Jarrah Planks x12	Double checking measurements, measuring each plank individually	Enclosed leather shoes and apron at all times in workshop
3 hours	Cutting domino joints	Cutting holes for the domino joints in the Jarrah planks to make the three boards	Domino Machine Clamps Clamping board Festool vacuum	Marked Jarrah planks x12	Testing the machine at each cut point to ensure cutting blade lines up with marking (at correct height)	Enclosed Shoes Apron Goggles Ear protection
1.5 hours	Fitting dominos	Testing the dominos in their intended holes to ensure proper fit, and sanding them down if required	Sanding board	Cut Jarrah planks x12 10mm Dominos x36	Ensuring dominos aren't too tightly or loosely fitting Testing every join fit	Apron Enclosed leather shoes
2 hours	Dry run of each plank set	Setting up clamps, fitting dominos, and assembly board to ensure clamp slider locked in correct position	Board Clamps x3/board	Cut Jarrah Planks Fitted 10mm Dominos x36	Checking clamp setting and alignment with board Ensuring correct domino fit	Apron Enclosed leather shoes
30 mins	Setting up for board gluing & assembly	Ensuring clamps open and ready, glue ready (top unblocked), dominos matched to the cut they are going in during assembly	Board clamps x3/board	Cut Jarrah planks Fitted 10mm Dominos x36 PVA glue to check	Ensuring glue quality (not dried/hard layer formed), ensuring all dominos fit correctly in respective cuts	Apron Enclosed leather shoes
1 hour	Gluing and clamping of planks to make boards	Applying glue to cuts and connecting edge, spreading with finger, inserting dominos, connecting 2 planks to make a half board each time, connecting half boards to make full boards and lowering into clamps	Board clamps x3/board	Cut Jarrah planks Fitted 10mm Dominos x36 PVA glue to use	Ensuring clamps tight enough to hold boards together, loose enough to reduce the chance of any warping occurring	Apron Enclosed leather shoes
20 mins	Setting boards into final position in clamps	Adjusting boards and clamps to ensure planks line up as well as possible with each other when under compression to correct any movement from clamp tightening	N/A	Jarrah boards in clamps	Ensuring as close to flush finish as possible, adjusting where necessary	Apron Enclosed leather shoes
10 mins	Wiping excess glue squeezed from joints during clamping	Using damp paper towel to wipe any excess glue from the boards, to provide a smooth finish for when the boards get machined to the correct thickness by Ian	N/A	Jarrah boards in clamps Damp paper towel	Ensuring any/all glue beading is wiped away, so board is smooth for thickness machining later	Apron Enclosed leather shoes
1 hour	Measuring out top recces on legs	Using a ruler to measure out the top recess on the legs to be cut in order to support the top section of the bed side table	Ruler Try square Pencil	American Ash legs x6	Ensuring correct measurement, and ensuring all measurements match	Apron Enclosed leather shoes
20 mins	Ian cutting majority of recess out	Ian using the band and sliding saws to cut out the majority of the top recess on the legs due to amount being removed	Band saw Sliding saw	Marked American Ash legs x6	Ensuring proper fitting of leg against block to ensure cut happening at the same place on each of the legs	Apron Enclosed leather shoes Safety goggles
20 mins	Setting up router to remove rest of material from recess	Setting up the router to ensure it would remove the material, so the recess was the correct depth across the surface, on all legs	Router Clamps Clamping board	Cut American Ash legs x6	Ensuring router depth set, and screw tightened to avoid accidental change	Apron Enclosed leather shoes
40 mins	Routeing remaining material from top recess	Using the router to remove the remaining material from the recess, giving it a flush, smooth and even depth across the surface	Router Clamps Clamping board Festool vacuum	Cut American Ash legs x6	Ensuring material at the same height behind the material being router, to avoid router tipping	Apron Enclosed leather shoes Safety goggles Ear protection

17222835J

Time	Operation Description	Process	Tools Required	Materials Required	Quality Assurance Checks	Safety
45 mins	Marking and measuring lower recess (roughly)	Marking and measuring the lower recess on the legs, roughly, as the final thickness of the board was not precisely known, only the height from the ground being known	Ruler Pencil Try square	American Ash legs x6	Checking measurements, and ensuring the distance from the base of the leg to base of the recces is the same on all legs	Apron Enclosed leather shoes
20 mins	Ian using the sliding saw to cut three cuts in the legs	Ian using the sliding saw to put three cuts into the legs where the lower recess is located, with a thin section of wood between the cuts	Sliding saw	American Ash legs x6	Ensuring cut lines up on all of the legs, so the base, and the rest of the unit, sit at the correct height and flat	Apron Enclosed leather shoes Safety goggles
5 mins	Using a screwdriver to twist out thin wood	Using a flathead screwdriver to twist, and pop out the bits of wood remaining between the cuts made by Ian	Screwdriver	American Ash legs x6	Being careful not to twist too hard and risk removing excess wood, damaging legs	Apron Enclosed leather shoes
30 mins	Using router to remove excess from screwdriver twist	Using the router to remove the remaining wood from the screwdriver twist, leaving a flat back on the lower recess	Router Clamps Clamping board	American Ash legs x6	Having material at the same height behind leg to stop router tipping	Apron Leather shoes Safety goggles
1 hour	Ian cutting to size and thicknessing boards	Ian cutting the boards to size on the table saw (560mm x 560mm) and then running them through the thicknesser aiming for 20mm	Table saw Thicknesser	Jarrah boards x6	Ensuring ruler arm properly secured to ensure no movement, and removing slack from thicknesser	Apron Enclosed leather shoes Safety goggles Ear protection
1 hour	Sanding boards	Sanding the boards with 120, 240, and 400 grade sand papers to remove marks, and smooth the wood before applying finish	Cork block Sandpapers	Jarrah boards x6	Ensuring even pressure and sanding across the boards for a consistent finish	Apron Enclosed leather shoes
1 hour	Setting up and applying finish to boards	Setting up off cuts of wood to keep board off of the table, and wiping on a polyurethane finish using linen cloth	N/A	Wood off cuts Linen cloth Wipe-on Polyurethane Finish	Ensuring thin, but suitable layer of poly applied, with any excess being wiped off with a different clean cloth	Apron Enclosed leather shoes Gloves
20 mins	Measuring top cut for lower recess	Measuring and marking the thickness of the Jarrah board to allow for the position of the top cut to be marked	Ruler Pencil Try Square	American Ash legs x6	Checking measurements align on all legs to ensure flat position of board	Apron Enclosed leather shoes
10 mins	Ian cutting top cut	Ian using the sliding saw to make the top cut in the legs, and checking to ensure the recess is the correct thickness so it fits	Sliding saw	American Ash legs x6	Checking to ensure that the board fits in recess, while saw still in position	Apron Leather shoes Safety goggles
1 hour	Sanding legs	Sanding the legs with 120, 240, and 400 grade sand papers to remove marks, and smooth the wood before applying finish	Cork block Sandpapers	American Ash legs x6	Ensuring even pressure and sanding across the legs ensuring a consistent finish	Apron Leather shoes
5 mins	Cutting off-cuts	Using the Hegna saw to cut the off cuts into smaller pieces for use as stands for applying the finish to the legs	Hegna Saw	Off cuts x3	Ensuring the smallest practical piece to minimise marks left during finishing	Apron Leather shoes Safety goggles
1 hour	Setting up blocks and applying the finish to the table legs	Using the off cuts to hold the legs off the table, as the polyurethane finish was applied and left to dry	N/A	Wood off cuts Linen cloth Wipe-on Poly finish American Ash legs x6	Ensuring an even coating of poly, and being careful to remove finger marks left from turning them	Apron Leather shoes Gloves
5 mins	Measuring and marking side sections	Measuring and marking the side sections of the upper unit to be cut to size	Pencil Ruler	Jarrah sides x2	Ensuring measurements correct and align with board	Apron Leather shoes

5 mins	Ian cutting side sections to size	Ian using the sliding saw to cut the side sections to the correct length	Sliding Saw	Jarrah sides x2	Ensuring saw lines up with mark for the correct length	Apron, goggles Leather shoes
40 mins	Lightly sanding boards and legs	Lightly sanding the boards and legs after the first coat of finish has dried, smoothing it with 400 grade sandpaper	Cork block 400 grade Sandpaper	Jarrah Boards x3 American Ash legs x6	Only doing a light sanding, as to not sand off the 1st layer of polyurethane	Apron Leather shoes
40 mins	Applying a second coat of poly	Applying a second layer of polyurethane to the boards and legs, in the same manner as the first, to improve protection and deepen the colour of the woods	N/A	Wood off cuts Linen cloth Wipe-on Polyurethane Finish	Ensuring the second layer is applied lightly and evenly, touching up any patches missed in the first coat	Apron Leather shoes Gloves
10 mins	Using the table sander to sand sides	Using the table sander to sand the table sides with 120 grade paper, slimming them slightly at the same time as removing marks	Table sander	Jarrah sides x2	Ensuring sander is set so it just touches the side, without digging into it	Apron Leather shoes Safety goggles
40 mins	Lightly sanding the boards and legs	Lightly sanding the boards and legs after the second coat of finish has dried, smoothing it with 400 grade sandpaper, ensuring perfect smoothness, for the final poly layer	Fresh 400 grade sandpaper Cork block	Jarrah boards x3 American Ash legs x6	Ensuring the second layer is sanded to perfection, to create the highest quality base for the third final layer	Apron Leather shoes
40 mins	Applying a third coat of poly	Applying a third and final layer of poly to form the outer protective layer for the woods	N/A	Wood off cuts Linen cloth Wipe-on Polyurethane Finish	Making sure the 3rd layer is applied with the utmost care to ensure a perfect finish for the wood	
20 mins	Sanding the sides	Sanding the sides with 240 and 400 grade sandpapers to provide a smooth surface to apply the finish onto	Cork block Sandpapers	Jarrah sides x2	Ensuring even pressure and sanding along the sides ensuring a consistent finish	Apron Leather shoes
10 mins	Setting up and applying finish to the side	Placing off cuts and applying the polyurethane finish to the side pieces with linen cloth cut from bed sheets	N/A	Wood off cuts Linen cloth Wipe-on Poly finish Jarrah sides x2	Ensuring an even coating of polyurethane, and being careful to remove finger marks from flipping it over	Apron Leather shoes Gloves
30 mins	Marking out drawer sections	Marking out the drawer pieces from the American Ash planks	Pencil Ruler Try Square	American Ash planks x3	Checking markings to guarantee accuracy and to minimise waste	Apron Leather shoes
10 mins	Lightly sanding side pieces	Lightly sanding the sides after the first coat of finish has dried, smoothing it with 400 grade sandpaper	Cork block 400 grade sandpaper	Jarrah sides x2	Ensuring perfectly even pressure and sanding evenness	Apron Leather shoes
10 mins	Applying the 2nd coat to the sides	Applying the second coat of wipe-on poly to the side pieces to build on the protection and colour from the first	N/A	Wood off cuts Linen cloth Wipe-on Poly Finish Jarrah sides x2	Ensuring an even coating of polyurethane, and being careful to remove finger marks from turning it over	Apron Leather shoes Gloves
20 mins	Ian cutting drawer pieces	Ian using the band saw to cut the drawer pieces from the planks	Band saw Magnetic holder	Marked American Ash planks x3	Checking holder to ensure straight cut	Apron Leather shoes Safety goggles
30 mins	Sanding the sides and drawer pieces	Sanding the pieces with 120, 240, and 400 grade sand papers to remove marks, and smooth the wood before applying finish	Cork block Sandpapers	American Ash drawer pieces Jarrah side oieces	Applying even pressure to provide an even, smooth finish	Apron Leather shoes

40 mins	Applying the 3rd coat to the sides & 1st to the drawer pieces	Meticulously applying the 3rd and final layer of poly to the side pieces, and the 1st layer to the drawer unit pieces	N/A	Wood off cuts Linen cloth Wipe-on Poly Finish Jarrah sides x2 American Ash pieces	Applying a meticulous third layer to ensure stunning appearance for the user, and to protect the product going forward	Apron Leather shoes Gloves
30 mins	Drilling dowel holes	Drilling dowel holes into all attaching components to hold the unit in place once constructed	Drill Clamps	All connecting pieces	Making sure measurements line up, and drill is in centre of mark for correct fitting	Apron Leather shoes Safety goggles
20 mins	Lightly sanding drawer pieces	Lightly sanding the drawer pieces after the first coat of finish has dried, smoothing it with 400 grade sandpaper	Cork block 400 grade sandpaper	American Ash drawer pieces	Ensuring perfectly matched pressure and sanding evenness and smoothness	Apron Leather shoes
20 mins	Applying the 2nd coat of poly to drawer pieces	Applying the second coat of wipe-on poly to the drawer pieces to increase the protection and colour depth provided	N/A	Drawer pieces Wood off cuts Linen cloth Wipe-on Poly Finish	Applying an even, light coat of poly, wiping away any excess for the smoothest of finishes before the 3rd coat	Apron Leather shoes Gloves
20 mins	Attaching drawer rails to side pieces	Drilling, and then screwing the sliding rails for the drawer into the side pieces in preparation for the drawer unit	Drill Screwdriver	Drawer rails Side pieces	Carefully attaching the rails to ensure the smoothness and ease of operations	Apron Leather shoes Safety goggles
20 mins	Lightly sanding drawer pieces	Lightly sanding the drawer pieces after the second coat of wipe-on poly has dried, smoothing it with 400 grade sandpaper	Cork block 400 grade sandpaper	American Ash drawer pieces	Lightly sanding the pieces to perfection, to provide an excellent base for 3rd coat	Apron Leather shoes
20 mins	Applying the 3rd coat of poly wipe to drawer pieces	Gently and perfectly applying the 3rd and final layer of poly to the drawer pieces to provide excellent protection and colour	N/A	Drawer pieces Wood off cuts Linen cloth Wipe-on Poly Finish	Applying a thin, even layer for a smooth, flat finish, protecting the wood in the most high use section	Apron Leather shoes Gloves
40 mins	Final sanding of all pieces	Final light sanding of all pieces after the 3rd layer of poly has been applied, to provide a smooth final finish to the wood	Cork block 400 grade sandpaper	All pieces	Gently sanding all pieces to leave a smooth, high quality finish on the product	Apron Leather shoes
30 mins	Drilling of drawer unit dowel holes	Drilling of the drawer unit dowel holes to help hold everything together once assembled	Drill Clamps	Drawer pieces	Carefully drilling dowel holes to hold the draw together once assembled	Apron Leather shoes Safety goggles
30 mins	Gluing and assembly of main unit	Gluing and assembly of the final main unit's frame, ready for the final attachment of the drawer unit and assembly	Clamps	PVA glue All Jarrah pieces + American Ash legs	Carefully gluing the frame to minimise excess and staining, whilst maximising strength and durability	Apron Leather shoes
30 mins	Gluing and assembly of drawer unit	Gluing and assembling the drawer unit of the bed side table, in preparation for its attachment	Clamps	PVA glue All drawer pieces	Carefully gluing and assembling the drawer to guarantee quality	Apron Leather shoes
20 mins	Drilling and screwing drawer unit to main unit	Drilling and then screwing the drawer unit to the rails from the main unit, to complete the main bedside table section	Drill	Screws Main unit Drawer unit	Carefully aligning drawer with body unit to ensure smooth, easy operation	Apron Leather shoes
10 mins	Attachment of lights	Attaching the LED light strip to the underside of the middle Jarrah board to illuminate the lower Jarrah board	N/A	LED light strip Bed side table unit	Carefully positioning the strips to be parallel with each other, a set distance apart, for the best lighting effect possible	Apron Leather shoes

17222835J

Quality Measures

During material selection 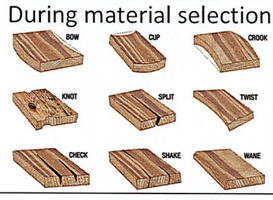	• Looking for flaws, such as rough patches, dents, holes, deep scratches, large variation in colour and especially cracks • Looking for any warping, such as bowing, twisting or cupping • Noting the position of features such as knots, as it may be useful to use them as a decorative feature for the product
Prior to marking sizes/material 	• Double checking all measurements that are being worked with, particularly in visible pieces, as its harder to fix mistakes • Using the try square to check all corners and edges are square, particularly important with legs/areas supporting the products weight • Attempting to work around any flaws found earlier
Whilst marking sizes/material 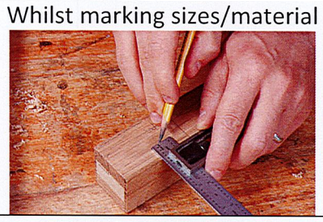	• 'Measure twice cut once' ensuring accuracy • Ensuring material is square, as this can change over the course of a few days, particularly on partly worked wood • Incorporating the width of the saw blade into measurements if necessary, such as where there is no/very little excess • Using pencil as it can be erased, not leaving a mark
When cutting 	• Cutting out items as accurately as possible, i.e. cutting in one go, rather than have the saw used by someone else, and having to change the settings back, reducing accuracy • Ensuring proper use of the machine, knowing how it works, and how to use it effectively to increase accuracy i.e. reducing slack in the lifter mechanism • Test runs before hand to ensure the machine has been properly set up for the task
During sanding 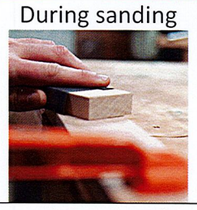	• Sanding until no scratches can be seen, with increasingly dense gradings of sandpaper for a smooth finish • Keeping sanding block flat, parallel to the item being worked • Keeping away from/being very careful around corner to avoid softening/rounding them inadvertently
Joining wood 	• Conducting a dry run beforehand, to ensure all components fit, and tools such as clamps have been set up correctly • Using damp paper towel to remove any beading glue/excess, to avoid having it stain the wood being joined • Ensuring the right amount of glue it used, too much will make a mess, and too little means the project will fall apart
Woodworking equipment/machinery 	• Using the highest quality tools/machines available to help increase the accuracy, and therefore quality of the product • Ensuring relevant tools are sharp before use, making it easier, safer and more reliable to use them • Checking that the equipment/machinery is set up correctly, and can be used in an appropriate fashion • Practicing with new machinery beforehand to understand how it works/what to expect i.e. the kickback when the router is first turned on
Working drawings 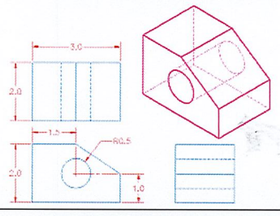	• Always having access to the working drawing, to allow for measurements to be double checked, reducing the chance of mistakes, and to help relevant parties understand what is being done/needs to be done • Always having access to a reference to base potential changes/alterations from, and to be able to record them
Production 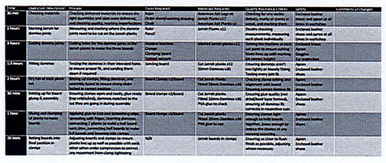	• Having a production plan to refer to, to stay on track, and to help others understand what's being done/needs to be done, ensuring all set procedures are followed correctly • Completing dry run assemblies first, particularly with larger items, to ensure there are no issues that need to be fixed, before an item is glued, and it's too late

Material Costing

17222835J

Material	Amount	Cost
American Ash 150x50	1/1.20	39.24
Jarrah 150x25	3/2.40, 1/2.50	154.40
Cut-end light adapter	x10	20.99
Light extension cables	x7	29.99
Drawer sliders	x2	12.99
Small Items	N/A	20.00
TOTAL		**$277.61**

Summary of Material Costing

The total cost of the materials used in the project are within the users original budgeted $300. The lights used in the product were provided by the user, having been repurposed from the users house, and thus aren't included in the costing, as they weren't purchased for this project. The same goes for the subwoofer, which the product was designed around, but was already owned by the user. The small items category includes items such as the wipe on poly, screws, the dominoes and biscuits used in the joining processes, as well as the PVA, sandpaper and metal brackets used. In the photo of the wood invoice included below, the top material order & price have been redacted, as they are for another students project, not my own. Other details have also been redacted for various reasons, none of which relate to my project.

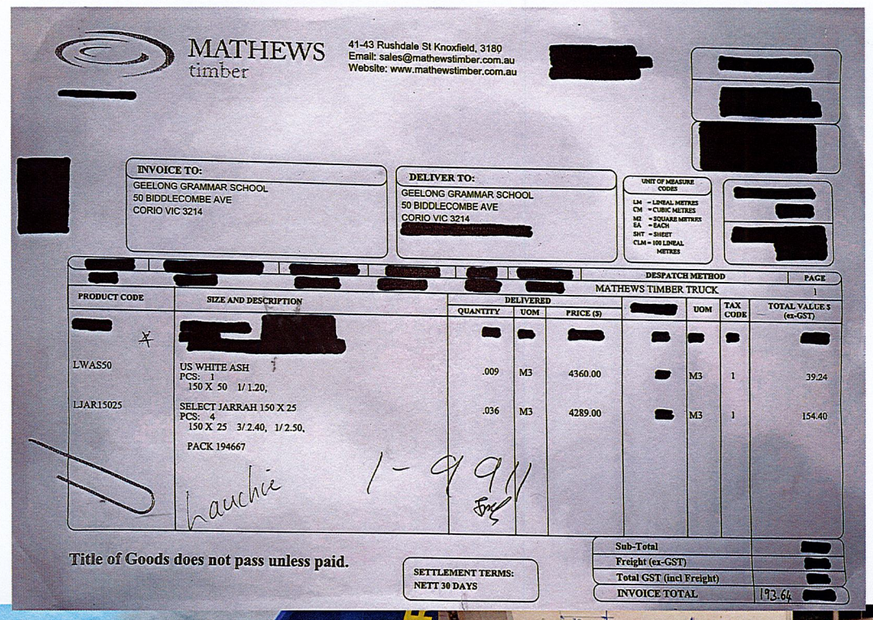

MATHEWS timber
41-43 Rushdale St Knoxfield, 3180
Email: sales@mathewstimber.com.au
Website: www.mathewstimber.com.au

INVOICE TO:
GEELONG GRAMMAR SCHOOL
50 BIDDLECOMBE AVE
CORIO VIC 3214

DELIVER TO:
GEELONG GRAMMAR SCHOOL
50 BIDDLECOMBE AVE
CORIO VIC 3214

UNIT OF MEASURE CODES
LM = LINEAL METRES
CM = CUBIC METRES
M2 = SQUARE METRES
EA = EACH
SHT = SHEET
CLM = 100 LINEAL METRES

DESPATCH METHOD: MATHEWS TIMBER TRUCK
PAGE 1

PRODUCT CODE	SIZE AND DESCRIPTION	DELIVERED QUANTITY	UOM	PRICE ($)		UOM	TAX CODE	TOTAL VALUE $ (ex-GST)
LWAS50	US WHITE ASH PCS: 1 150 X 50 1/1.20,	.009	M3	4360.00		M3	1	39.24
LJAR15025	SELECT JARRAH 150 X 25 PCS: 4 150 X 25 3/2.40, 1/2.50, PACK 194667	.036	M3	4289.00		M3	1	154.40

Lauchie 1-9911

Title of Goods does not pass unless paid.

SETTLEMENT TERMS: NETT 30 DAYS

Sub-Total	
Freight (ex-GST)	
Total GST (incl Freight)	
INVOICE TOTAL	193.64

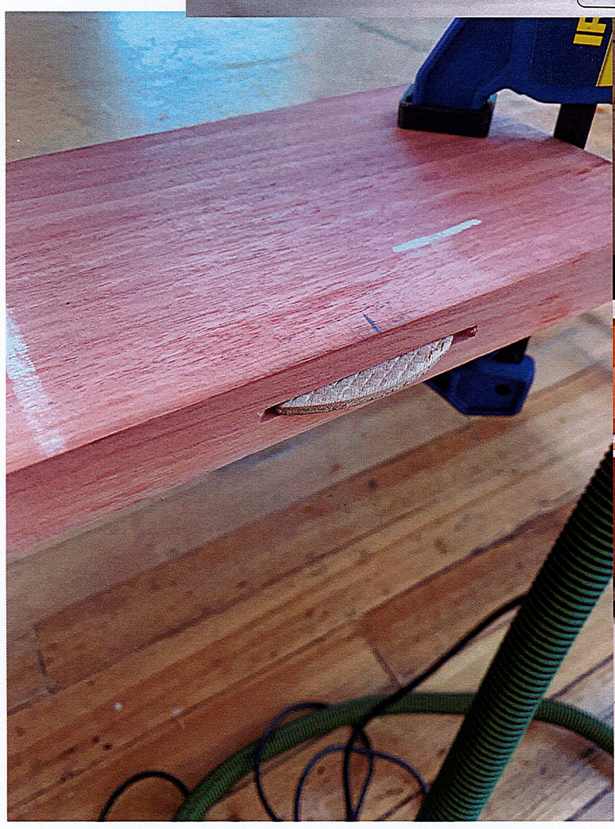

Risk Assessment:

Machine/Tool	Hazards	Possible Injuries	Likelihood /5	Seriousness /5	Risk Control	PPE
Band Saw	• Impact & Cutting • Entanglement • Noise • Electrocution • Slips/trips/falls • Debris/dust	• Cuts • Tripping • Electrocution • Eye/ear damage • Scalping • Breathing problems	2	4	Ensure hair/loose clothing/loose objects/jewellery are secured & kept clear from moving parts when in use. Keep limbs & body parts clear when on. Consider push stick/guidance rail use.	
Biscuit Router	• Impact & Cutting • Entanglement • Electrocution • Noise • Slips/trips/falls • Dust	• Cutting • Electrocution • Eye damage • Dust inhalation • Ear damage	1	3	Ensure hair/loose clothing/loose objects/jewellery are secured & kept clear from moving parts when in use. Ensure users hands and body are kept clear from cutter when on. Ensure work is clamped, and appropriate guarding in use.	
Thicknesser	• Impact & Cutting • Electricity • Noise • Slips/trip/falls	• Dust inhalation • Electrocution • Entanglement	1	3	Ensure hair/loose clothing/loose objects/jewellery are secured & kept clear from moving parts when in use. Ensure guarding in use	
Router	• Cutting • Entanglement • Electrocution • Noise • Slips/trips/falls • Dust	• Cutting • Electrocution • Eye damage • Dust inhalation • Ear damage • Scalping	3	4	Ensure hair/loose clothing/loose objects/jewellery are secured & kept clear from moving parts when in use. Ensure users hands and body are kept clear from cutter when on. Ensure work is clamped, and appropriate guarding in use.	
Bench Saw	• Impact & Cutting • Entanglement • Electrocution • Noise • Slips/trips/falls	• Cutting • Electrocution • Scalping	1	3	Ensure hair/loose clothing/loose objects/jewellery are secured & kept clear from moving parts when in use. Ensure users hands and body are kept clear when on. Ensure work is clamped.	
Measuring Tape	• Cutting • Pinch point	• Cut	1	1	Keep fingers away from moving tape edge, let in slowly	
Hegner Saw	• Entanglement • Impact & Cutting • Electricity • Slips/trips/falls • Dust	• Cutting • Electrocution • Eye damage • Dust inhalation • Scalping	1	2	Ensure hair/loose clothing/loose objects/jewellery are secured & kept clear from moving parts when in use. Ensure users hands and	

17222835J

Hegner Saw Cont.					body are kept clear when on. Ensure work is secure.	
Wooden Mallet	• Striking • Crushing	• Crushing	2	2	Keep fingers and hands clear when using the mallet	
Chisel	• Striking • Cutting	• Cutting	2	2	Keep fingers and hands clear when using the chisel	
Mitre Saw	• Cutting • Striking	• Cuts to the hands	2	1	Keep fingers and hands clear when using the saw	
Bobbin Sander	• Entanglement • Impact & Cutting • Electricity • Slips/trips/falls • Dust • Friction	• Electrocution • Dust inhalation • Friction burns	1	2	Ensure hair/loose clothing/loose objects/jewellery are secured & kept clear from moving parts when in use. Ensure users hands and body are kept clear when on. Ensure work is secure.	
Bench Clamps	• Impact • Crushing	• Crushing	1	3	Ensure clamps are balanced and secure, keep hands clear